ISSN Print: 2394-7500
ISSN Online: 2394-5869
Impact Factor: 5.2
IJAR 2015; 1(7): 210-214
www.allresearchjournal.com
Received: 23-04-2015
Accepted: 21-05-2015

Ashish Manoj Mhetar
Student M Tech – VLSI Design & Embedded Systems. MSRIT, Bangalore

Lakshmi Shrinivasan
Assistant Professor ECE Department MSRIT, Bangalore

Correspondence:
Ashish Manoj Mhetar
Student M Tech – VLSI Design & Embedded Systems. MSRIT, Bangalore

3D Potter: A revolutionary 3D Printer

Ashish Manoj Mhetar, Lakshmi Shrinivasan

Abstract
The 3D Potter is a combination of revolutionary idea with a traditional base that adds the functionality of high speed 3D printing using FDM technology for modelling / printing spherical and circular objects at higher speed and cost effectiveness. This thesis consists of Idea and the implementation of 3D printer. The proposed technique reduces cost of the 3D printer by more than 80%, without sacrificing the accuracy of printing. This technique cuts down the print time of such printer by 15-25 % depending on the curvature of the model to be printed.

Keywords: 3D Potter, 3D Printer, FDM

1. Introduction
Many people have not yet heard the term 3D printing, the procedure was invented and being used for decades. Manufacturers have since a long time ago utilized the printers as a part of the prototyping procedure to make models for conventional assembling. However, until the most recent couple of years, the hardware has been lavish and slow. 3D Printers are machines that produce physical 3D models from computerized information by printing layer by layer. It can develop physical models of articles either outlined using a CAD tool or scanned with a 3D Scanner. It is utilized as a part of a mixture of commercial ventures counting gems, footwear, modern plan, construction modeling, building and development, car, aviation, dental and medicinal businesses, and instruction and customer items.
3D printing is in its infant stage as far as Indian market and industry is concerned. There are very few 3D printers available in Indian market and their prices range from 50k to 3L. There is lot of scope in 3D printing industry in INDIA. So here a cheaper solution is proposed for hobbyist so that they can start rapid prototyping of small designs for their projects. This technique proposed reduces the print time of such printer by 15-25 % depending on size and shape of the model to be printed.

2. Literature Survey
3D printing is a process of making a physical object from a three-dimensional digital model, typically by adding or removing a material. There are two methods of 3D Printing
1. Additive Manufacturing
2. Subtractive Manufacturing
Fused Deposition Modelling (FDM) [3] is an additive process now a days being used by most of 3D prototyping machine manufacturers. It uses a print head consists of Heater block, nozzle filament guide assembly. A plastic filament (ABS: Acrylonitrile Butadiene Styrene, PLA: Poly Lactic Acid) supplies material to an extrusion nozzle using filament guide assembly.The nozzle is heated by heater block to melt the material. The heated material which becomes semi-solid then can be moved in 3 dimensions. The part, or model, is produced by depositing layers of thermoplastic material to form 3D objects and the material hardens immediately after extrusion from the nozzle.
The main idea in 3D printer [1] is to move printer head (in 3d printing language it is referred as Extruder) in 3 dimensions (X, Y, and Z) to print 3D object by method of Fused Deposition Modelling (FDM). All available 3d printers use linear motion in all 3 dimensions.

3. Problem Statement

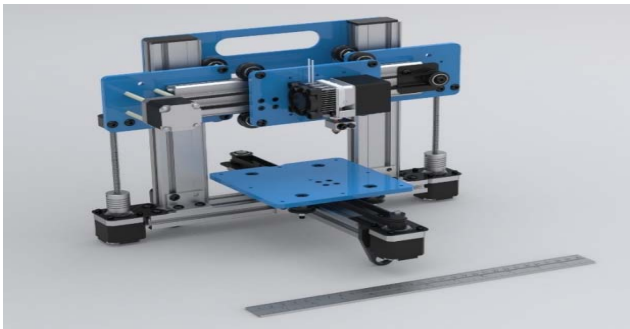

Fig 1: A conventional Cartesian 3D Printer

Conventional 3D Printers are very costly and the main problem associated with it is speed and time of printing. Especially when it comes to circular shaped objects it's difficult to print in these conventional printers.
Remarks on the existing conventional Cartesian 3D printers:

- The present 3D printers work on Cartesian system principle. Where all 3 dimensions X, Y and Z are linear in motion
- Because of this linear motion it becomes difficult to print circular shaped objects.
- This linear motion in all 3 dimensions tends to increase the extruder motion thereby reducing printing speed for circular shaped objects.

4. Proposed Solution

The paper mainly focuses on the designing a 3D printer which can be easily modified to 3D Potter which will be useful to print circular shaped objects.it also focusses on designing a firmware which is capable of reducing printing time for 3D Potter.
The paper mainly explains how Fused Deposition (FDM) technology is used for 3D printing and how 3D Potter technique can reduce printing time for circular shaped objects. Inspired from Potter's Wheel, we propose to make a printer with one of its 3 dimensional motions to be circular like potter's wheel instead of conventional linear motion. This method will help in printing circular objects.

4.1 Block Diagram

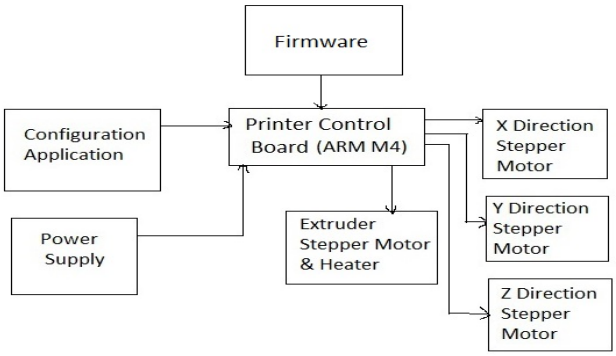

Fig 2: General Block diagram for 3d printer

It Takes virtual models (3D blueprints) from CAD software and "slices" them into digital cross-sections for the machine to successively use as a guideline for printing. These digital codes are used by printer control board having a microprocessor to run three stepper motors to control motion in three dimensions.
Extruder heats material which melts and becomes semi solid which is deposited on bed to form 3D structure.
In conventional available 3d Printers, all the 3 motions are linear. As printer head (Extruder) moves linearly in X and Z direction. Bed assembly moves linearly in Y direction. Because of this linear motion it becomes difficult to print circular objects. Linear motion reduces printing speeds for circular objects.
My idea is to design a 3D printer which can print circular objects easily. Based on ***Potter's Wheel Principle*** I propose to change the design to print circular objects

Principle: I propose to make Y bed assembly motion to be circular like potter's wheel instead of conventional linear motion as shown in fig 3. So the name 3D Potter

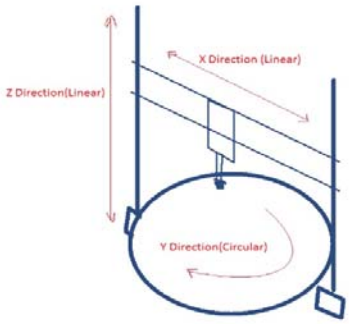

Fig 3: 3D Potter Idea

As we are using two linear and one circular motion which corresponds to cylindrical co –ordinate systems we say this is a cylindrical 3D Printer. In conventional Cartesian printers while printing circular objects both X axis and Y axis always moves to adjust the coordinates of point to be printed. But in case of Potter to print one whole layer of circle you have to move in X axis only once to adjust the radius (r). Once radius is fixed to plot all points on circle potter has to move 360 degrees in Y axis, which is one rotation. So Potter can reduce movement required for printing, which ultimately reduces efforts required. This reduction in motion results in increased speed and hence reduction in printing time.

4.2 Mechanical Design

Mechanical structure of printer plays very important part in reducing the price of the printer. Here the models were created in Unigraphics CAD tool as shown in figure 4.

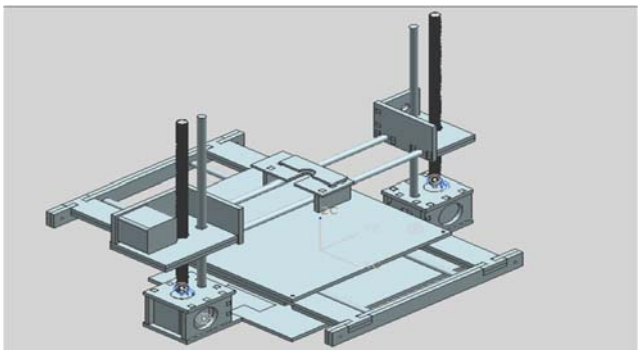

Fig 4: CAD model for conventional printer

Then these models are laser cut in LASER cutting Machine. Then they are assembled together to create a mechanical structure.
The above figure 3 shows conventional all linear motion 3D printer. Here we replace Linear Y bed by circular bed. So the design for 3D Potter using circular bed is shown in figure 5.

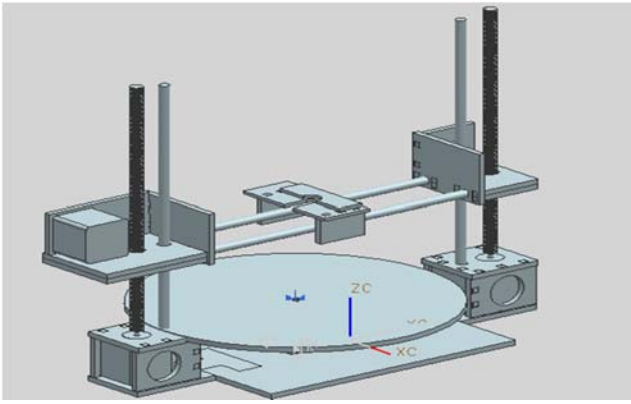

Fig 5: CAD model for 3D Potter

4.3 Printer Control Board
Printer Control Board [7] is heart of 3D Printer which controls precise motion of stepper motors using stepper drivers. Board contains a microcontroller which is interfaced to host application on computer via USB. Stepper drivers are used to control stepper motors which provides higher current for operation of stepper motors. The firm ware written in controller will convert the g-code information given by 3D CAD file of object to be printed, to a precise step angles of stepper motors. Extruder stepper motor controls motion of Filament in extruder

4.3.1 Firmware
Firmware is a program that controls working of printer board. It specifically converts Cartesian g-code information to required stepper angles.

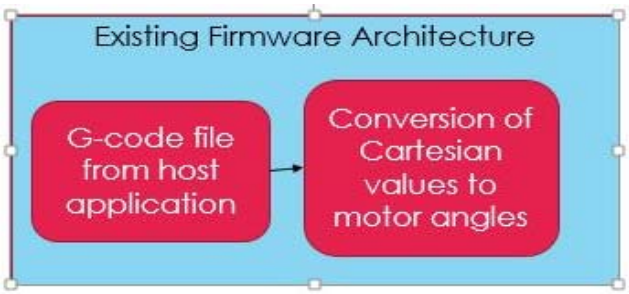

Fig 6: Firmware architecture for conventional 3Dprinter

Above figure shows high level architecture of existing firmware. 3D Potter requires two linear and one circular motion which can be explained with cylindrical co-ordinate system. In cylindrical co-ordinate system the three co-ordinates are γ, θ, z. out of which γ, z. are linear and θ is circular co-ordinate. So we can call this type of printer as cylindrical 3D printer.Therefore to get cylindrical g-code, the Cartesian information given by application software should be converted to cylindrical. So firmware architecture needs to be changed. Here another block is inserted, which will convert Cartesian co-ordinates to cylindrical. The modified architecture is as shown in figure 7 below.

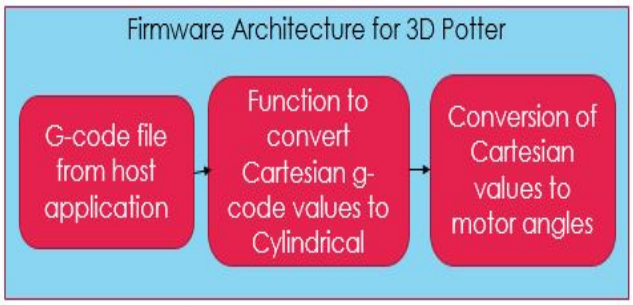

Fig 7: Firmware architecture for 3D Potter

One extra function is inserted which will convert the Cartesian coordinates to cylindrical coordinates. This Cartesian to cylindrical mapping can be done using maths conversion formulae.
The mapping from three-dimensional Cartesian coordinates to cylindrical coordinates is as shown in figure 8 [9]

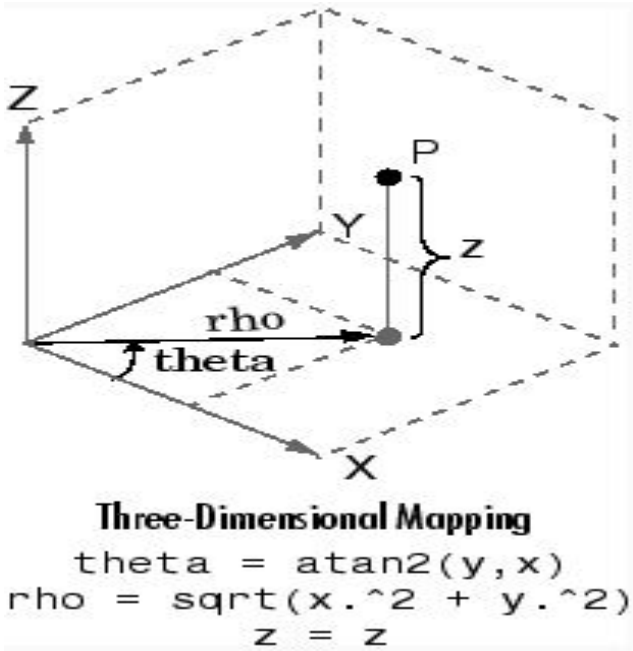

Fig 8: Cartesian to cylindrical mapping

Using above equations for mapping we can write a program that converts Cartesian to cylindrical. This program is inserted in existing firmware which converts Cartesian g-code data coming from host application to cylindrical g-code data required for 3D Potter.

4.4 Working Principle
The 3D printing process consists of following steps
a. 3D CAD Modelling
b. Firmware Uploading
c. Connecting printer to host Application
d. slicing the 3D model and start Printing

a) *3D CAD Modelling:* The process starts by designing 3D CAD model of a object to be printed in any CAD tool such as AutoCAD as shown in figure 9. Then these 3D models are opened in host application using stereo lithography (.stl) file format. There are lots of open source host application softwares are available.

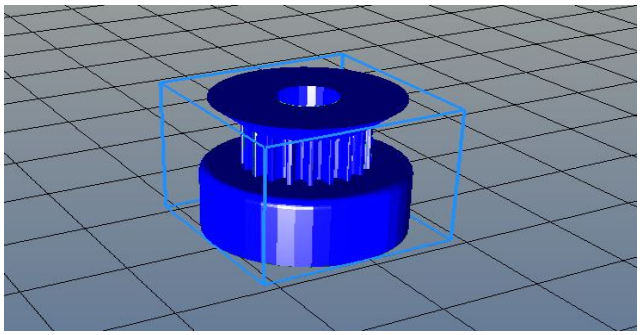

Figure 9: CAD model of 3D object to be printed (Pulley)

b) ***Firmware Uploading***: once CAD model is ready, printer should be connected using printer control board to computer and upload the modified firmware into microcontroller. There are many open source firmware available. Repetier firmware is very famous and compatible with many boards, so Repetier is used after modifying it with Cartesian to cylindrical conversion for 3D Potter.
The Firmware is heart of Printer Board which controls precise motion of all stepper motors according to g-code data.

c) ***Connecting printer to host Application:*** Then we have to connect the printer to computer using the host application via USB port. Here we have to set required connection settings such as baud rate etc. Once Printer is connected to computer we can control printer head through application. Then we set the head position at home where we intend to start the printing on printing bed.

d) ***Slicing the 3D model and start Printing:*** There are different slicing methods such as concentric, honeycomb, rectilinear etc. Slicing is method of splitting CAD models into layers with some defined set of structure. Then we slice the 3D model into digital cross-sections for the machine to successively use as a guideline for printing as shown in figure 10

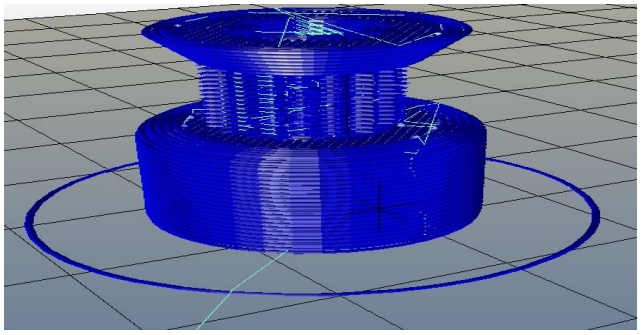

Figure 10: Slicing of CAD model

After slicing is done we have set feedrate, flow rate etc. Then we can start printing the object.
As we can see in case of circular shaped object like pulley shown in figure 9, it's easy for Potter to print object, because for one layer which is circle radius is fixed for all points on circle just angle changes. So Printer head has to move only once to adjust the radius and then Y bed which is circular in case of Potter will rotate for whole 360 degree to print circle. So here we are reducing printer head motion which can give good printing speed thereby reducing print time.

5. Results

The complete experimental setup of 3D Potter prototype is as shown in Fig. 11

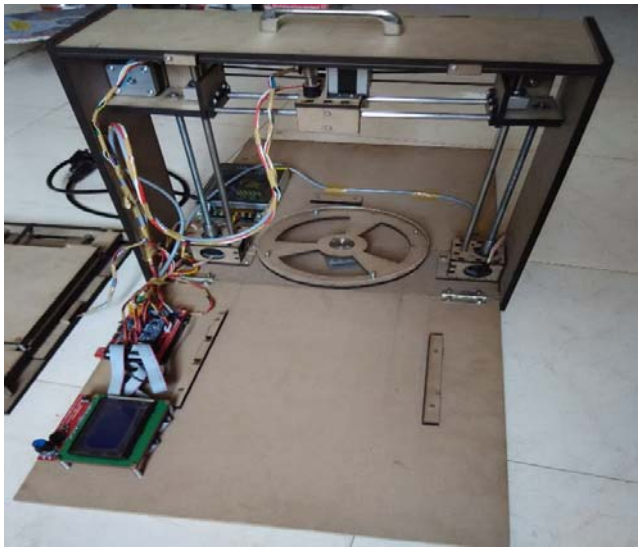

Fig 11: Working model of 3D Potter

To compare results same object in both conventional Cartesian 3D printer and 3D potter were printed and noted the time required by both the printer to print same object.
3D CAD model of timing geared pulley was used as shown in previous figures as reference model to be printed in both Printer and Potter. When we printed pulley in both the machines we got the following results.

1) Timing required to print pulley in Conventional Linear Motion 3D Printer : 18 min & 6 sec

Fig 12: Print time for 3D Printer

The above figure 12 shows timing noted in Repetier Host application used to control the printer. This reading shows time required for 3D Printer to print pulley

2) Timing required to print pulley in 3D Potter : 13 min & 42 sec

Fig 13: Print time for 3D Potter

The above figure 13 shows timing noted in Repetier Host application used to control the printer. This reading shows time required for 3D Potter to print pulley

6. Conclusion

The overall mechanical structure designed after rigorous testing and iteration is up and running as expected. The portable suitcase design also works perfectly where we can fold the printer after use and fit inside small space.

Here we can clearly see that printing time required to print the same pulley is less for 3D Potter than the 3D Printer. Potter took approximately 4minutes less to print the pulley. We can conclude that, the 3D Potter technique really cuts down the print time of 3D printer by 15-25 % depending on the curvature of the model to be printed.

7. References

1. Holland D, O'Donnell G, Bennett G. “Open design and the reprap project," in Proc. 27th Int. Manuf. Conf., 2010, 97106.
2. Upcraft S, Fletcher R. “The rapid prototyping technologies," Assembly Autom 2012; 23:318330.
3. Fused Deposition Modelling, https://www.solidconcepts.com/content/pdfs/brochures/FDM-brochure.pdf
4. Lipson H, Kurman M. Fabricated: The New World of 3D Printing, 1st ed. New York, NY, USA: Wiley, Feb, 2013.
5. http://en.wikipedia.org/wiki/3D_printing
6. RepRap Project - Wikipedia, the free encyclopedia, en.wikipedia.org/wiki/RepRap_Project
7. Teensylu Control Board http://www.geeetech.com/wiki/index.php/Teensylu
8. http://www.explainingthefuture.com/3dprinting.html.
9. Relations between Cartesian, Cylindrical, and Spherical Coordinates, http://www.geom.uiuc.edu/docs/reference/CRC-formulas/node42.html